# Novel Architectonic Solutions for Industrial Log

## Five Examples of Contemporary Architecture

**Matti Lakkala**
Oulu School of Architecture, University of Oulu
matti.lakkala@oulu.fi

**Janne Pihlajaniemi**
Oulu School of Architecture, University of Oulu
janne.pihlajaniemi@oulu.fi

**Riikka Kuittinen**
Oulu School of Architecture, University of Oulu
riikka.kuittinen@luoarkkitehdit.fi

## Abstract
There is a growing demand on using log as a construction material. In addition, production technology and technical properties of log products have undergone rapid changes in the era of industrial production. Examples for use of industrial log, that are architecturally suitable for the requirements of new uses, are few. For these reasons in this paper, it is explored what are the properties of industrial log building, and what kind of novel, structurally characteristic architectonic solutions for industrial log emerge in contemporary architecture. Besides a literature review, a qualitative analysis on five examples of contemporary architecture is conducted. As results, we showcase several novel architectonic solutions for industrial log. The first category of results, overall configuration of logs, includes entireties of logs that are structurally bearing, but also entireties where the logs act in other function than as structurally bearing. Entireties of logs are supported by next two categories – joining of logs and properties of individual logs, which can both be seen as components of the overall configuration. This study creates basis for further research on architectural possibilities of industrial logs. In addition, findings of this research can serve as an inspiration for designing architects and log house industry.

**Keywords:** log building, log architecture, wood architecture, contemporary architecture

## Introduction
In Finland there has been a major public concern regarding problems in quality of indoor air of buildings – especially schools and other public buildings, but also smaller single-family houses. The reasons for these problems are quite well known today thanks to active research on the matter. Present-day multilayered wall structures have proven to be vulnerable to moisture related

PEER-REVIEWED ARTICLE

issues, in cases when even seemingly minor mistakes occur in construction phase or damage is made accidentally during the use of building (Mölsä 2016). This is why more simple and comprehensible building techniques, such as massive, homogenous wall structures have become topical. In log building walls consist entirely of solid wood. Massive, homogenous structures are considered by many the most reliable alternative for wall structure in terms of moisture related issues, because homogenous structures are far less sensitive – compared to multilayered wall structures – for errors that could cause moisture to condensate inside the wall.

Along with its structural simplicity and comprehensibility, another reason why log constructions have become very current, is the ecological aspect of using wood in buildings (Heikkilä 2002, p.19). Built environment is responsible of almost one third of all CO2 emissions worldwide (Kuittinen 2016, p.2). One simple and fast solution to reduce the emissions would be to increase the use of wood, a renewable natural material, in buildings (Ruuska and Häkkinen 2012). Especially in large-scale buildings, the use of wood has been marginal compared to other materials such as steel and concrete. This is however beginning to change. More and more wood structured apartment blocks and other large scale buildings are being built around the world as well as in Finland at the moment, mainly using solid wood products, such as cross laminated timber, CLT, as bearing structure (Harju 2017). Log building, a construction technique of ancient origin, makes even more use of wood: In log buildings, the only material used in wall structure is solid wood – as an insulation as well.

In ancient times, logs used to be mere tree trunks that were notched to form walls. Since then, contemporary, industrially produced log has become a long way in terms of technical quality and production techniques. Industrially produced logs of today are usually glued together from multiple smaller lamellas of wood, and are manufactured in a factory setting. Architecture of industrially produced log houses on the other hand is less developed, compared to developments in the manufacturing of log and log buildings. In the past, in areas of boreal forest, log was nearly the only material that was used for building. There are for instance many examples of sophisticated log architecture in the history of Finnish church architecture, built by skilled craftsmen (Soikkeli and Koiso-Kanttila 2006). In Finnish context, log was superseded in the beginning of 20th century by frame construction (Heikkilä 2002, p.15). After that log remained to be used in smaller volumes in sauna huts and few Lapland tourist buildings until the turn of 1950's, when log houses began to be produced industrially.

The tradition of skilled craftsmen did not transfer in to the industrial production of log houses. Industrial log houses have been traditionally summer cottages, sauna huts and single-family houses by use and have been built to areas of dispersed settlement. What is also noteworthy is that during the first five decades of industrial log house production, no professional designers were used in the practices of log house manufacturers (Jokelainen 2005, p.12). Consequently, log houses eventually became merely industrial products where buildings' appearance was dictated by optimization of production technology (Heikkilä, 2002, p.15). Log house manufacturers have since the turn of the millennium developed their products further and today some industrial log houses that are acceptable for more urban residential areas exist. Today, there is a growing demand on using log in urban areas in large-scale public buildings as well as in residential buildings of all sizes, where requirements for architectural quality are strict. Thus, it is clear that architectural solutions for industrial log houses still need to be developed to match these new requirements and new properties of developed product and production technology.

Log building has since industrialization been a rather uncommon way of constructing, and this reflects to scientific research concerning log building as well. The few examples of scientific research in the field of log building

concerns mainly industrially produced logs' structural qualities from engineering's viewpoint, such as structural strength of log constructed walls under compression (Bedon and Fragiacomo 2015; Grossi, et al. 2016). In addition, log home manufacturing has been studied from the viewpoint of forestry (Peters et al. 2017; Thony et al. 2006). When broadening the scope to other research concerning wood, numerous studies have been conducted concerning the experiential effects of wood, which can offer useful aspects to log research as well, as noted by Luusua et al. (2019). Examples of other literature dealing with log building exist, but are quite few by number with subjects concerning mainly history of log building and hand hewing of logs. (Phleps 1982; Vuolle-Apiala 2012) In addition, studies on other solid wood architecture – that is, CLT architecture – exist. Bejder (2012) in her dissertation studied the aesthetic qualities and materiality of cross- laminated timber; and Falk (2005), in his dissertation studied architectural aspects of massive timber plates in the scope of structural form and systems. These studies contain some knowledge on log architecture as well, as part of the history of wooden architecture.

Thus, the architectural viewpoint in the scope of log building is almost completely unexamined field of research. However, research from this viewpoint has been conducted by Jokelainen (2005) who in his dissertation studied the significance of log structures to the architecture of historical railway stations in Finland. In historical context, Jokelainen examined what kind of architectural possibilities and restrictions log as a building material possesses and what kind of requirements log structure sets for the architectonic form. As a result, Jokelainen indicates that there are several factors due to the log structures, which affect the architectonic form of studied buildings. The significance of structural configuration of logs in log architecture creates the starting point for the paper at hand as well. Besides functioning as a bearing structure, log structure often acts as an insulation layer and forms the visible surfaces both inside and outside. Thus, in order to develop architecture of industrial log buildings, it is crucial to examine architectural solutions from structural viewpoint.

The aim of this paper is to map novel architectonic solutions for industrially produced log that are based on the characteristic structural properties of industrial log and log building. This is done in the scope of contemporary architecture, as a natural continuation for Jokelainen's work in historical context. The research question is, what kind of visible architectonic features that are based on the characteristic structural properties of industrial log and log building, that are particularly novel and thus architecturally interesting, emerge in contemporary architecture? The notion of novelty means that we aim at exploring such solutions that demonstrate – compared to everyday industrial log building of today – new possibilities for log architecture. Therefore, as a by-product, this research aims also to take first steps in broadening the orthodox conception of log building to match the new industrial properties of log building. Next, a literature review is presented on what are the characteristic structural properties of industrial log and log building, followed by results of qualitative analysis on example buildings of high-quality architecture.

## 2. Literature review

### 2.1. Multiple definitions of log

Log building is a very old technique. The earliest archeological proofs of log constructions are from Stone Age, from 5000 years ago. The origins of the building technique might be in Italy and the Alps, but it is possible that basic notching of logs has been realized locally over the centuries and millennia in boreal forests of the world (Vuolle-Apiala 2012, p.52). In the beginning, log was simply a tree trunk that was felled and then notched to form walls. Taking a leap to present day, log is described as "solid, at least 68 mm thick building material manufactured by plane or turning machine, used mainly as log for walls."

(Building Information Ltd. 2014) This is a general concept for log, which is supplemented by definitions of lamella log or glue-log: “It is glued together out of two or more pieces with vertical, horizontal or cross bonds.” (ibid.) Industrial logs of the new millennium are quite different from the mere round tree trunks of ancient history, not least because they are usually manufactured by gluing lamellas of wood together (Bedon et al. 2015, p.475). Log has undergone a massive development in terms of technical quality during its existence. Contemporary log is a high-quality product of engineered wood and is homogenous by grade as well as precisely measured (Heikkilä 2002, p.17). Heikkilä even contemplates if contemporary industrial log is already too a precise industrial product and therefore possibly lacking some positive qualities such as liveliness of hand-hewn log (ibid., p.17). Industrial log resembles considerably glued laminated timber, which by definition is “an improved form of solid timber in which the growth-related defects in the wood that tend to reduce the strength have been partly eliminated.” (Herzog et al. 2012, p.40)

To fill the gap between ancient history and present day, in terms of definition of log, it seems that tools for woodworking enhanced, and so did building techniques for log buildings. Eventually logs of round shape were started to be hewn so that the sides were vertical and straight. Hewing the outer side of log wall vertical made logs more durable against the weather since surface wood – which is more quickly decaying – was removed to expose the more durable heartwood (Heikkilä 2002, p.11). In addition, hewing the outside surfaces of walls flush enhanced – by the standards of the time – the looks of a log building (Kaila 1996). It made a log building appear more as a brick building, and thus fitting better to urban context. When it comes to dimensions of logs, for example in Finland since 18th century, a typical width of logs used in log walls was six inches. This was due to common guidelines based on good building practices of the time, which recommended a four-inch-wide caulking gap between the logs and an additional inch of wood on each side of the wall (Kaila 1996). To elaborate, the purpose of caulking gap is to make the structure weather tight against rain and wind. The height of individual logs was the same as the trees’ diameter. This way a reminiscence of the trees original round cross-section profile remained visible in a form of a bevel of approximately one inch

The cross-section profiles of present-day industrial logs consist mainly of rectangular shapes with small variations in profiling of corners. As seen in figure 1, characteristic to these cross-sections are small tongues and grooves whose specific shape depends on the manufacturer and whose purpose is to achieve proper interlocking between overlapping logs (Bedon et al. 2015, p.475). Also

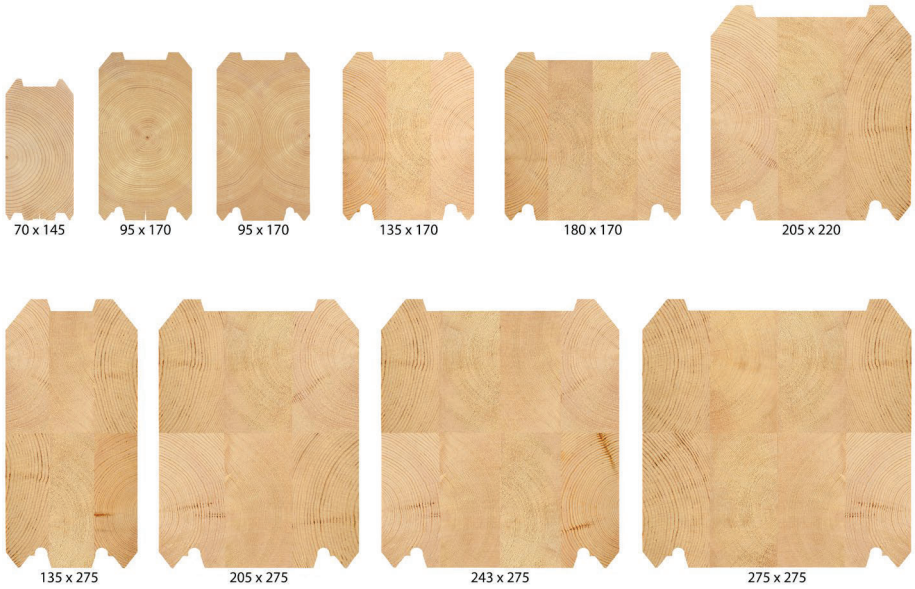


**Figure 1. Industrial log profiles made out of single piece as well as multiple pieces of wood for different uses.** (Images courtesy of Kontiotuote Oy)

some round or so-called D-profiles exist but rectangular profiles have nearly superseded them in contemporary log buildings (Building Information Ltd. 2014). In the selections of Finnish industrial log producers, there is a wide variety of logs with different cross-section sizes with widths ranging between approximately 90 mm and 270 mm and heights between 145 mm and 270 mm. The smallest of these can be planed out of single piece of wood but with cross-section sizes more than 100mm of width or 200mm of height the logs are mainly produced by gluing lamellas of wood together, the amount of lamellas ranging from two up to eight. (Mammuttikoti 2015; Kuusamo Hirsitalot 2017) Minor profiles are used for sheds and cottages while larger are used for purposes of residential and public buildings.

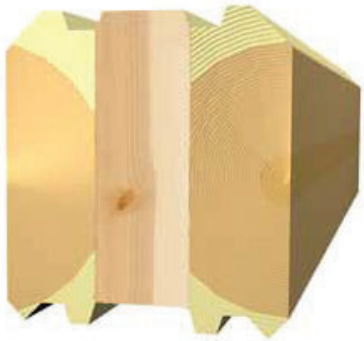

**Figure 2. Non-settling log.** Wood shrinks only in direction perpendicular to grain, and in here the vertical layer of wood in the middle prevents shrinking. (Image courtesy of Matti Alasaarela, Inspis Oy, used with permission)

Sizes of these industrially produced lamella-logs vary by use, but it could be argued that in general they imitate more or less the dimensions and proportions of so-called original or traditional logs consisting of one tree trunk. In addition, the bevels in profiles of industrial logs have long resembled earlier logs where the round shape of the tree was visible in the corners of the cross-section profile, as described above. Only recently have some log manufacturers established profiles with minor, delicate bevels to their repertoires.

Most significant technical development of past years for industrial log has been the so-called “non-settling log” – a lamella log in which the wood material in the middle part of the log is in upright direction while the wood in the two sides is in longitudinal direction of log (Vuolle-Apiala 2012, pp.185-186), as seen in figure 2. Using this type of logs removes the one feature of log building, which requires the most consideration in design and construction – that is, settling. Sometimes it is questioned, if industrial log solutions are even log building. Vuolle-Apiala for example, bypasses industrial log building by few general mentions, because “different manufacturers have their own solutions, of which functionality can be assessed only by experiences accumulated during future decades.” (ibid., p.6)

## 2.2. Structural characteristics of log building

### General characteristics of log constructions

German term for log house, blockhaus, makes an indication of one essential feature of log construction. Term tells the simplified essence of log building. It is actually stacking blocks of wood one upon the other, which then stay together due to gravity hence making it in a way similar to building with stone or bricks. Swiss architect Peter Zumthor (2006), portrays log wall as a wall of layered beams of wood – wall is constructed by placing beams of wood on top of the other. Traditionally, these layers of wooden beams are called courses. In his home region, log buildings – or blockhouses as he puts it – are called strickbauten, which according to Zumthor means knitted houses. The term refers to the actual construction process of a log building, where the whole is knitted together with beams. (ibid.) Log wall achieves its structural strength mainly from fitting and interlocking at the corners (Phleps 1982, p.52). To form a corner, which is structurally relevant, it requires one meter of solid wall on both sides of the corner (Jokelainen 2005, p.167). This is an indication of another important structural feature of log wall. Log wall can form a structural wall plate – that is, a shear wall (Herzog et al. 2012, p.127). This is achieved by doweling, in which individual logs are joined together by wooden pegs or steel screws (Heikkilä 2002, p.21-23). This feature can be taken advantage of also by forming log beams where two or more overlapping logs, which are doweled together, form a beam (Building Information Ltd. 2014).

### Settling

One characteristic feature of log building is settling. Wood is a hygroscopic material, which means it will gain or lose moisture from the air, and this causes wood to expand or contract according to humidity changes in surrounding environment (Meier 2016). Thus, a building frame consisting of horizontally laid logs settle during time as the logs shrink when they dry out. Because wood is

an anisotropic material (Thibaut et al. 2001, p.704), shrinkage of wood is particularly strong in direction perpendicular to grain. Some of the overall shrinkage is due to gravity, when the fittings between the logs tighten over time. Settling is thus exploited making a log structure airtight (Falk 2005, p.28). Settling of log constructions made out of industrially produced logs is significantly lesser (Heikkilä 2002, p.23) compared to earlier log houses, since the timber of industrial logs is dried in advance prior to production. Settling brings about some challenges structurally speaking that need to be considered. Generally, this means that any construction such as concrete wall or building parts such as windows or doors that are attached to a log wall must allow movement of the wood across the grain (Zumthor 2006). When using the so-called non-settling log, which was described above, log structure does not settle almost at all. The shrinkage is the same as for example of structures made out of CLT. Technically non-settling log is a strip of CLT.

### Joining of logs

Joining – that is, knitting of strickbauten – is how log wall achieves its structural strength. Joining of overlapping logs could be divided in two main categories: joining of parallel logs and joining of crossing logs. Parallel logs are joined together besides by tongues and grooves, also by steel or wooden dowels. Joining of crossing logs is used when two crossing logs encounter. This occurs in intersections of two walls – such as corners and when wall abuts on crossing walls side – or when a single log intersects with wall. Simple round notching, where log ends extend beyond the joint is the oldest of corner types. However, in order to achieve certainly tight-fitting joint at the corners, log builders throughout history have developed a variety of alternative corner types, as some examples are seen in figure 3. In the course of time also dovetailed corners, where log-ends are flush with the crossing wall, were developed. This was done in order to emulate the smooth walls of solid masonry construction and in some cases to facilitate the application of exterior cladding of some type. As noted above, the function of cornering is primarily structural, but during its evolution, cornering began to be used also as a distinctive decorative motif of log buildings. (Phleps 1982, p.60)

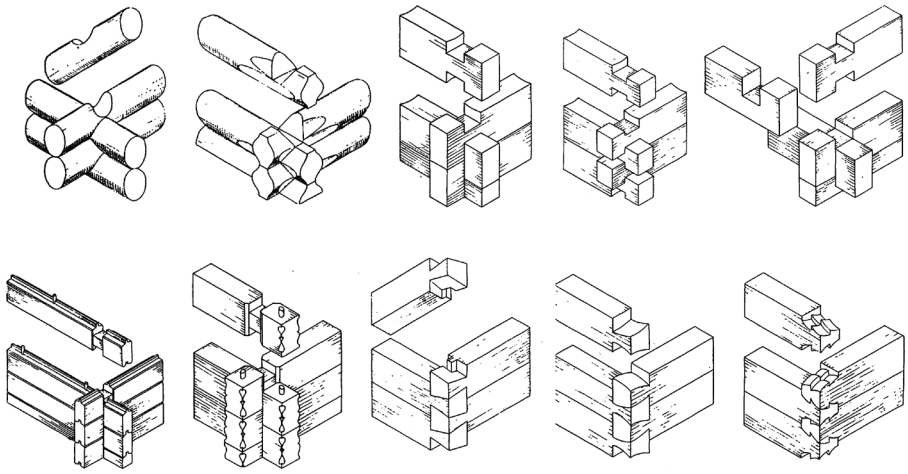

**Figure 3. Few examples of the abundance of traditional cornering techniques ranging from simple round notching to sophisticated lock notching, in which log ends create a strong decorative motif in a flat corner.** (Figure by the authors, according to Phleps 1982)

Though in hand-hewing tradition flat, flush cornering is a centuries old tradition, in industrial production it is relatively new development since Jari Heikkilä (2002, p.21) states the lack of such corner option being one of the greatest deficiencies of industrial log production at that time. Today such corner types are available in industrial production. In addition, as seen in figure 4, a hidden dovetail joint has been developed to meet the visual requirements of densely built urban areas (Mammuttikoti 2015). In this solution, intersecting logs are miter cut. Interlocking between the logs is achieved by hidden dovetail joint in the center of the miter cut. Characteristic for all other corner joints is that they

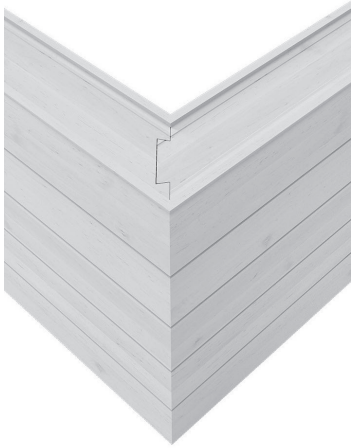

**Figure 4. Corner of log walls with a hidden dovetail joint.** (Image courtesy of Mammuttikoti)

reveal and emphasize the construction technique as well as wall's thickness. Hidden dovetail joint also enables the log courses to be even instead of the traditional half-lapping courses. Thus, when hidden dovetail joint is utilized, log buildings that don´t appear as log buildings – by orthodox definition – are created.

As a summary it can be stated that contemporary, industrial log is a product that is made out of solid wood, either a single piece of wood or multiple lamellas of wood that are glued together. However, this type of beam or block of wood becomes log only after it is assembled in a certain way – that is, laid upon each other horizontally. Thus, the addressed knowledge gap and aims of this study together with literature review on rapidly developed structural characteristics and other nuances of industrial log and log building serve as the motivation and conceptual framework for our study of novel architectonic solutions for industrial log. Next, we will present the research process, which we devised for this purpose.

## 3. Materials and methods

The analyzed example buildings of high-quality architecture were selected from a set of architectural publications. High-quality architecture is defined here through the institutional concept of architectural quality, which in this case means, that the professional actors in the field of architecture define what is considered as high-quality architecture. (Pihlajaniemi 2014, pp.63-66). Publications were chosen through an iterative process so that they could be expected to cover sufficient number of published buildings considering the research topic. Chosen publications included two major international web-based publications (ArchDaily, Dezeen), two international printed publications (Detail, Architecture and Urbanism) as well as two Finnish architectural publications (Finnish Architectural Review, Wood). Publications were general by nature, meaning that they cover buildings of all sizes and uses, and buildings in urban and rural environments. This was seen essential as our presumption was that log buildings are traditionally used more in rural environments and they are relatively small-scale buildings. Wood magazine is concentrated solely in publishing wooden buildings. The temporal scope for our study is from year 1990 to October 2017. The printed publications cover the entire temporal scope of the research. However, Archdaily was established in 2008 and Dezeen in 2006, and though they entail some published buildings from the entire temporal scope, primarily they cover approximately the last decade of the temporal scope of this study. Despite their shortage in the temporal coverage, we wanted to exploit them as well since they cover such a large number of published buildings in an easily searchable format.

As the selection criteria for the buildings, we used a broad definition of log building that was established in the previous section of this paper, instead of orthodox conception of a log cabin. Used definition takes into account the recent developments of log products. This way we could find besides the obvious log buildings, also the buildings that are not called log buildings nor could be unambiguously regarded as ones but nevertheless contain such features and solutions that are of interest in the framework of this research.

All the buildings that fit the given criteria were listed, see table 1. The total amount of found examples was 86 buildings. As a sidenote it could be said that the number of listed buildings is relatively small compared to the amount of buildings that these publications comprehend. For example, in Archdaily alone, 2744 buildings were published in year 2016 (ArchDaily 2017a). This can indicate to the fact that log building is relatively rare in general as a construction technique or / and that it is rare for log architecture to be regarded as good enough architecture worth publishing. This interesting question is not however in the focus of this study.

**Table 1. All found building examples from separate sources.**

| *Source* | *Building examples listed* |
|---|---|
| *Archdaily* | 21 |
| *Architecture and Urbanism (A+U)* | 19 |
| *Detail* | 7 |
| *Dezeen* | 8 |
| *Finnish Architectural Review* | 22 |
| *Wood* | 38 |
| *Total* | 86* |

**Some examples were published in multiple sources, but each of these is included in total sum only once.*

**From top left: Figure 5. Final Wooden House (Image courtesy of Iwan Baan). Figure 6. Haus Luzi (Image Courtesy of Ralph Feiner). Figure 7. Yusuhara Wooden Bridge Museum (Image courtesy of Takumi Ota). Figure 8. Workshop AWEL. (Image courtesy of Jürg Zimmermann). Figure 9. Norwegian Wild Reindeer Center Pavilion. (Image courtesy of Ketil Jacobsen).**

The listed buildings were tentatively evaluated and out of these the five example buildings were selected. The aspect of novelty directed the choosing of the examples. From this viewpoint, the chosen examples were considered as the most illustrative in the found selection of buildings. That being said, it should be noted that the expertise of the authors as architects that have experience in the field of wood and log architecture, obviously strongly affected the selection of the examples. The chosen five examples are Haus Luzi by Peter Zumthor, Final Wooden House by Sou Fujimoto, Yusuhara Wooden Bridge Museum by Kengo Kuma & Associates, Norwegian Wild Reindeer Center Pavilion by Snøhetta Oslo AS, and Workshop AWEL Andelfingen by Rossetti and Wyss Architekten, see the figures 5-9 above. The buildings were completed in 2002, 2006, 2011, 2011 and 2015 respectively. Analyzed buildings are diverse by means of scale and use.

The qualitative data, through which the example buildings were analyzed, consisted here of photos and drawings representing the buildings as well as text descriptions by the architects responsible for the building designs. Even though the examples were discovered through the publications mentioned earlier, more drawings and photos were then searched from additional sources when needed in order to reach a sufficient understanding of the buildings. Table 2 represents the material available, and sources used for each example.

**Table 2. The sources and material available of the selected buildings.**

| *Example building* | *Used sources* | *Available documents* |
|---|---|---|
| ***Haus Luzi*** *(originally listed from Dezeen)* | (Zumthor 2006) | 5 photos, floor plans, sections, elevations, sketch drawings, text description by the architect |
| ***Final Wooden House*** *(originally listed from Detail)* | (Archdaily 2008) Additional 14 photos from Iwan Baan Studio | 30 photos, site plan, assembly diagrams (plans and sections), elevations, detail drawings, text description by the architect |
| ***Yusuhara Wooden Bridge Museum*** *(originally listed from ArchDaily)* | (ArchDaily 2012, Divisare 2016) | 9 photos, site plan, floor plans, elevation, sections, detail drawings, text descriptions from the architect |
| ***Norwegian Wild Reindeer Center Pavilion*** *(originally listed from Wood)* | (ArchDaily 2011) | 7 photos, plan, section, elevations, text description by the architect |
| ***Workshop AWEL*** *(originally listed from Detail)* | (Schweizer Baudokumentation 2015, Competitionline 2016, ArchDaily 2017b) | 10 photos, site plan, sections, elevations, detail drawing, conceptual sketch, text descriptions by the architect |

The actual method of analyzing the data has many similarities with qualitative research as described by Groat and Wang (2013, pp.215-258). In this method the research process has an emphasis on an inductive process (ibid., p.218)

and is usually framed "within either the intersubjective or subjectivist paradigms." (ibid., p.242) Our approach could be regarded as descriptive but also as exploratory research in the sense that the aim here has been to explore and remain open for novel solutions for industrial log. O'Leary (2009, pp.262-263) describes the process of qualitative analysis as six step cycle moving from raw data to theoretically meaningful understanding, and points out that instead of a linear process, it is typically an iterative one. In our research, after preliminary analyses, in order to move from raw data to organized data, each of the five examples was first analyzed separately according to aspects that were detected in the literature review to be structurally characteristic. These aspects included: 1) General description on how the logs of the building are assembled together and what kind of entirety they create; whether log is used as a bearing structure or not and what structurally characteristic features are there in the general structure. 2) How the logs are joined together? 3) What kind of logs are used; composition of log, size and shape of log and quality or texture of the surface of the log? 4) How architects have described their buildings from the viewpoint of the first three aspects? The same practice of analyzing buildings by the chosen identifiable factors of interest has been used before also by Jokelainen (2005) and Bejder (2012).

Photos and drawings were analyzed as documents illustrating the examples, from the chosen viewpoint of structural characteristics. Text descriptions were analyzed in order to reach more thorough understanding of the buildings and on intentions that the designing architects had described having regarding the solutions in the focus of this study. Textual data was used as complementary material in analyzing the buildings but also as a deepening material to reach better understanding of the meaning of the solutions that emerge in the example buildings. According to the aim of this study, in the analyses we focused on visible architectonic elements of the examples.

Building illustrations were transcribed into textual data with these analyses. Acquired textual data was then gathered into a comparative chart where all the analyses of individual buildings were alongside each other, divided according to the analyzed aspects one below another, and therefore easily comparable. Data reduction was then continued by detecting emerging themes in the separate analyses. These themes were then compared with each other inside one example as well as between examples to reach a thorough understanding of their significance and to draw conclusions.

# 4. Analysis

We found many novel visible architectonic features for industrial log that were structurally characteristic. When speaking of structurally characteristic architectonic solutions for industrial log, we found the following classification of results into three categories useful. The first category of novel solutions is the overall configuration of logs, or the entirety that the logs create. By this, we mean the kind of pile of wood – so to speak – the logs form. Entireties of logs that form the bearing structure of the building were present, but surprisingly also some structurally characteristic configurations of logs were found that had other meanings for the whole than structurally bearing. Second and third categories of joining and properties of individual logs can be seen as supplementary components or elements of the overall entireties. These other features mainly – with their properties – support the architectural idea created by overall entirety of logs. Thus, our findings are of different scales ranging from the scale of the entire building to the scale of properties of a single log. Next, we will present and discuss the found solutions through aspects of relevant literature, classified into three categories.

## 4.1 Overall configuration of logs

*Structurally bearing entireties*

In four of the examples, the overall structural configuration of logs was clearly the main architectural theme. In three of these examples, we considered the

overall, structurally bearing configuration to be particularly novel. Workshop AWEL is virtually a traditional shed by means of the entirety that logs create, so it is not examined here in detail.

To start with Haus Luzi – which is at first glance a very typical log building since it consists of traditional and structurally bearing log walls that are interlocked at the corners – there is certain novelty in the general structural configuration of logs. Building is composed of four log towers in the four corners of the house. As Zumthor (2006) has noted, log walls lose their natural strength if large openings are cut to them. By making four very solid log towers to the corners, see figure 6, Zumthor has been able to create large, glazed surfaces in between the towers. Since corners give the rigidity for the log house, this way the structure becomes very stable, despite the large, glazed surfaces.

Zumthor has established a set of rules for log building and followed them when designing Haus Luzi (ibid.). These rules are based mainly on characteristic structural features of log and log building. In Haus Luzi, they create the structural principle of four log towers, which has then served as “the spatial compositional principle of the ground plans”, as Zumthor (ibid.) puts it. Further, Zumthor has used floors, roof and walls as distinct slabs and planes, which give the building its characteristic looks. Considering the effect that the log structure has for the house by means of functionality and appearance, it can be seen how crucial this overall structural configuration of logs is for the architectural appearance of this building.

Yusuhara Wooden Bridge Museum on the other hand is not a log building by an orthodox conception. In Bridge museum there are no log walls at all that could be interlocked in the corners – but there are stacked beams of wood that cross each other, just as in a traditional log building. However, in this case, the beams are not directly one upon the other but displaced systematically in horizontal direction on each level of logs. Traditional log walls form a rigid wall plate. Quite similarly, in here the logs are stacked one upon the other and joint together in intersections and thus forming a bearing structural entirety for the bridge, as can be seen in figure 10.

**Figure 10. Structural entirety of logs in the Yusuhara Wooden Bridge Museum.** (Image courtesy of Takumi Ota)

When looking closer to the detail plans of the museum several matters indicate that the visible structural entity is not the only bearing structure for the bridge. For example, there is a steel beam on top of the central column of the bridge supporting the floor slab of the bridge. However, even if the structure of beams would not be used here as the only bearing structure, the principle of the visible structure is functional and very novel in the scope of this research. The structural entirety can be viewed as a log wall, where the parallel longitudinal beams are the logs, and the crossing beams are the dowels of that same wall. When the parallel logs are joined together with these dowels, the logs form a larger beam, a structural entirety that can cantilever a considerable span.

Like the Bridge Museum, nor is Final Wooden House unambiguously a log building based on the assembly technique of logs. Unlike in a log house of an orthodox conception, in Final Wooden House logs do not form walls by contiguous rectangles, although the basic shape of the building's layout is a square. Instead, the logs are laid upon each other not in a conventional manner but more freely, seemingly in almost random order. The structure of the building is basically a stack of wood blocks. This type of laying the logs creates the cave like space for the building, which is its main architectural theme.

*Entireties related to other functions that bearing structural*

Entireties described above manifest the bearing structural function of logs. However, such overall configurations where logs act in other function than as structurally bearing element – but still exploit the same structurally characteristic properties – emerged from the material as well.

*Wood is known to be versatile, but the notion that logs of a log house can also be used in providing necessary furniture, fixtures etc. as an integral part of the log structure is something rather untraditional and novel in the context of log building.*

Fujimoto talks about extreme versatility of lumber as the starting point of the design of Final Wooden House (Archdaily 2008). The architect wanted to create ultimate wood architecture (ibid.), of which the name Final Wooden House is an indication. "Rather than just a new architecture, this is a new origin, a new existence" (ibid.), Fujimoto describes. The architect has envisioned this imaginary new origin for wood architecture, a primitive condition, where different functionalities – such as "columns, beams, foundations, exterior walls, interior walls, ceilings, floorings, insulations, furnishings, stairs, window frames" (ibid.) – have not yet differentiated. Final Wooden House is virtually a stack of wood blocks, where – as the architect describes – "one thought was a floor becomes a chair, a ceiling, a wall from various positions." (ibid.) Versatility of log, or logs acting in other function than as bearing elements is the novel architectonic solution here. But how is this structurally characteristic? Firstly, even though logs are used in non-bearing manner, they are visually and functionally part of the same structure. Secondly, this is technically possible because of wood's structural properties. As seen in figure 11, these properties enable the logs to work as beams that can cantilever when needed and be used for hanging underneath structures from them. On the other hand, it is possible to use the same wood material as the surface material in these various uses that were counted above.

**Figure 11. Interior of Final Wooden House. (Image courtesy of Iwan Baan)**

In Norwegian Wild Reindeer Center Pavilion by Snøhetta, the architectural starting point has been the function of the building as a sheltered place for observing the surrounding nature. The outer shell is rigid and cold designed to withstand the harsh climate, while the interior of the building is warm and cozy. Logs of the pavilion are stacked upon each other but also besides each other

and all in parallel. This is the only one of the example buildings where logs do not function as the bearing structure of the building. Inside the log structure there is a secondary framework whereto the logs are attached. Instead of structurally bearing wall plates the logs of the building form something of other use than bearing structural. The stack of wood blocks is carved in to a free-shaped form, which creates a strong decorative element, but also a functional element by defining the space and providing a seating area for the use of the building. The element that the logs create is also visibly present in the two open facades of the pavilion, as seen in figure 12. This novel way of using log material is related to two things. Firstly, it is possible to sculpt something like this out of logs because of the homogeneity of the material. Secondly, this building illustrates what is possible with logs if present day computer aided milling machines and 3D-design software are exploited.

The versatility of log material is manifested in these two examples. In addition to structurally bearing components logs can be used to generate also parts that have other functions, as described above. Wood is known to be versatile, but the notion that logs of a log house can also be used in providing necessary furniture, fixtures etc. as an integral part of the log structure is something rather untraditional and novel in the context of log building.

**Figure 12. Free shaped log structure is visible in the façades of Norwegian Wild Reindeer Center Pavilion.** (Image courtesy of Ketil Jacobsen)

### 4.2. Various ways of joining the logs

In the entireties that were described above, logs are joined together. This joining can be done in multiple ways. Various types of joining were used in our example buildings as a way of underlining the architectural themes of the buildings. According to Zumthor (2006) the corner joints of a log building have a fundamental and expressive effect in log constructions. We believe that by this Zumthor refers to the fact that they reveal the very means of how the structure is crafted, and affect the appearance of the building.

*Various types of joining were used in our example buildings as a way of underlining the architectural themes of the buildings.*

Haus Luzi makes use of two different types of novel corner joints. In the interiors a finger joint is used, which differs from the more traditional half-lap joint. In this type of joint, logs' ends have symbolically speaking two fingers, instead of a traditional half of the log. The other type of corner joint, applied in outer walls of Haus Luzi, is a so-called T-joint. In this type of joint one wall plate extends past the corner while the other limits to the extending wall. This corner has a really distinctive effect for the looks of the building. Outer walls of Haus Luzi consist of two contiguous log walls that have an insulation layer in between. Both of these contiguous walls are rather narrow, and in the T-corner the outer one of these contiguous walls is the one extending, creating the distinct impression of a narrow wall slab.

Although no ordinary corner joints are used in Final wooden House or Bridge Museum, the way of joining the logs support the architectural idea created by the overall entity of logs. In Final wooden house, the blocks of wood are stacked on top of each other without notching. This supports the basic idea of the building as being a stack of wood blocks. Similarly, in Bridge museum there are no ordinary joints, since there are no log walls. The architectural idea of the whole structure is the traverse beams of wood stacked on top of the other. This idea is strengthened by notching the logs as little as possible in the joining spots. Beams are notched only as much that they keep in place and do not slip off from the intended joint.

In Workshop AWEL the architectural idea is to be a really simple shed made out of logs. The basic technique of log building and the enormous scale combined with the emphasized plain execution creates the strength for the architecture. Corner joints between the logs support this theme by being only really simple notches on both upper side and underneath of the logs.

In this category, we bypass Snøhetta's pavilion by mentioning that the logs are attached to a separate structurally bearing frame, which is why there are no particular log joints.

### 4.3. Properties of individual logs

*As well as by the manner of joining, also by the properties of logs the architectural themes of the buildings can be strengthened. These properties include type, dimensions and shape as well as surface grade of the logs.*

As joining of logs, also the properties of individual logs appeared in our material as components of the overall entirety of logs. As well as by the manner of joining, also by the properties of logs the architectural themes of the buildings can be strengthened. These properties include type, dimensions and shape as well as surface grade of the logs.

Zumthor (2006) describes how the length of the available tree trunks decides the size of the room and eventually this constrain leads to a certain scale of intimacy. This is only true when log is made out of single piece of wood, which is the case in Haus Luzi. The narrow cross-section size of logs of Haus Luzi is approximately 200 mm of height by 100 mm of width, which enables the slab like appearance of the walls. Logs are also free of any bevels so they form a flush wall surface, which also supports the same impression. Logs seem to be really smooth by surface, manufactured industrially by planing, which can be seen to suit the coziness of home.

Logs or beams of Final Wooden House are also made of single pieces of wood. A square cross-section profile of some 350 x 350mm for logs is utilized. The spatial architectural concept of the building requires application of wood blocks of considerable proportions, since with only few building blocks a usable space for human dimensions has to be created. What is also noteworthy is that these logs are not as much beams – not the shorter ones especially – as they are blocks of solid wood and thus resembling a brick or stone building blocks by proportions. The surface quality is not planed but rather fine cut – a technique which leaves the logs a bit rougher than plane – which supports the bungalow feel of the construct.

Also, in Snøhetta's pavilion, logs are made out of single tree trunks and are squares by cross-section profile. Regarding the surface quality of logs, the free shape of the log structure is created by CNC-milling. According to architects, they wanted to use quality and durable materials to withstand the harsh climate of the building site, as well as use natural materials in reference to local building traditions (ArchDaily 2011). In this sense, the 250 mm by 250 mm timber beams made of single piece of wood seem like a justifiable choice: Solid wood could be seen as a material that is certainly durable even if hikers sit and walk on the wooden stand, and sometimes with wet clothes. Cracks emerge to the logs when they dry over time, and the round annual rings of the whole tree are visible in the ends of the logs, emphasizing the naturalness of the material.

*In Workshop AWEL basically the only thing that separates the building from a traditional shed is the size – and not the size of the building alone, but especially the size of the utilized wooden elements, the so-called logs.*

Unlike the three examples above, industrial log houses of today are mainly built with lamella logs that are glued together of multiple pieces of wood. The final two examples showcase the possibilities of logs of glued laminated wood. In Kuma's Bridge, logs of the structure are precisely speaking glued laminated timber beams of 180 x 300 mm, consisting approximately of eight slices of wood that are glued together on top of each other. The size of the beams is carefully considered in terms of building's architectural presence and structural performance. By accumulating glu-lam beams of 180 x 300 mm, a cantilever structure is composed without using "oppressive-looking crossbeam with enormous sections" (Divisare 2016) This way, according to the architect, the structure would merge into the surrounding forest better (ibid.).

In Workshop AWEL basically the only thing that separates the building from a traditional shed is the size – and not the size of the building alone, but especially the size of the utilized wooden elements, the so-called logs. They are over thirty meters long and approximately two meters high glue-lam beams, see figure 13. Workshop hall shows that industrially produced logs can definitely differ a lot from original logs in terms of dimensions and still utilize the construction principles of a log construction.

**Figure 13. Workshop AWEL (Image courtesy of Jürg Zimmermann)**

## 5. Results

This paper has presented a study on novel visible architectonic features that are based on the characteristic structural properties of industrial log and log building, in the scope of contemporary architecture. In the literature review, it was defined what are the structural characteristics of industrial log and log building. By this new definition and by exploring novel solutions for industrial log, this study has presented new possibilities for log architecture and broadened the orthodox conception of log building to match the new features of industrial log building.

Novel solutions for industrial log in the scope of contemporary architecture that were found in this study were divided into three categories of solutions affecting the architectural appearance of the buildings. First category was the overall configuration of logs, which was divided into two sub-sections of structurally bearing and non-bearing. Structurally bearing entireties included the four log towers of Haus Luzi, cantilever structure of Yusuhara Wooden Bridge Museum and the stack of wood blocks of Final Wooden House. In entireties, that were not related to bearing structural function of logs log was given other meaningful functions. These included solutions such as log chair or stairs in Final Wooden House, and the free-shaped log structure of Norwegian Wild Reindeer Center Pavilion, which serves as a seating area but also as a strong visual element in the architecture of the pavilion. Other categories were such that they can be viewed as components of larger entireties of the first category. These were joining of logs and variable properties of individual logs. Essential was that the type of joints and other features of individual logs can be chosen so that they support the overall architectural idea of the entirety that the logs create. There is a large number of different corner joints in the history of log building to choose from, or one can invent completely new ones, like the T-joint of Haus Luzi, if needed. In addition, features of individual logs, such as the size of the log can be chosen according to the context. When using lamella logs, the range of possible sizes is naturally a lot wider, which was showcased in Workshop AWEL.

## 6. Conclusions

This study can serve as a basis for further research on architectural possibilities of industrial log architecture. The results can have also implications when designing and manufacturing industrial log buildings in the future. Found solutions can serve as an inspiration for designing architects. Also broadening of the orthodox conception of log building helps architects and industry to see the possibilities that industrial log building can have. All the solutions that were presented here are possible to manufacture in modern woodworking facilities, but log house manufacturers have their own routines by which they currently produce logs. Some of the presented solutions would require the manufacturers also to develop their factories and production lines. Thus, these results offer possible trends of future development for the log house industry as well.

None of the found examples utilized non-settling logs. This is probably due to the fact that non-settling log is a rather new product. However, it is possible that in the future, especially in the larger scale log buildings, the use of this type of non-settling log will increase, because it contains such considerable benefits compared to ordinary log, which settles crucially more. However, even with non-settling log some basic principles of log building still apply, though the logs do not settle. There is still a need for corners and dowelling in order for the log structure to become rigid.

Some characteristics of log building, including settling and the need for cornering, are often seen as complicating factors in designing log buildings. Nevertheless, sometimes these restrictions seem to be the very reason, why the architecture is so powerful. This is particularly evident in the case of Haus Luzi. Zumthor presents essential features of log building as constraints or

restrictions for log architecture that are fundamentally due to wood´s properties as a natural material. He describes achieving a pleasing form of architectural expression despite these constraints (Zumthor 2006). This is admittedly true, but we argue that this achievement was reached not despite the constraints but because of them. The fact that the architecture is based on the innovative and novel but still characteristic ways of using logs gives the strength for the architectural expression.

Industrial production of logs offers great possibilities for architecture, as was shown in this paper. When the logs are manufactured by gluing lamellas of wood together, there are no restrictions for the size of the logs. In addition, present day woodworking machinery enable a variety of possibilities. These advanced properties of log and log building in mind, it raises a question that should this kind of building be called log building anymore. As for example our analyzed example buildings, it is difficult to define unequivocally, which one is truly a log building and which not. Jokelainen (2005) raised this same question in his dissertation. He states that imitating traditional hand-hewing technique is a factor that restricts development of log architecture in the scope of industrial production, but adds that this new way of industrial log building should be called for example solid wood construction rather than log building. This essential question related to the concept of industrial log building would serve as an important subject for future research. Other natural, and more tangible, future research topics would be issues related to all three categories of results presented in this paper, as they were discovered having great effect on the architectural appearance of log buildings. Different kinds of structural configurations of logs for different building typologies, joining of logs and variable properties such as size of individual logs and their implications on architectural appearance would all need to be investigated further in order to exploit them better in practice.

## 7. Acknowledgements

This research paper is part of the research conducted in the Modern Log City, which is a three-year research project realized between years 2016 and 2019 in Oulu School of Architecture, University of Oulu. The project is funded by European Regional Development Fund (ERDF) and log house manufacturers of Northern Ostrobothnia. The objectives of the project are to investigate and develop new kind of architectural expression for log buildings suitable for urban environment, to study the utilization of mass-customization in the design process of log buildings and to research life-cycle economy of log buildings.

## 8. References

Archdaily, 2008. Final Wooden House / Sou Fujimoto. [on-line] Available at: <http://www.archdaily.com/7638/final-wooden-house-sou-fujimoto/> [Accessed: Aug 31, 2017].

ArchDaily, 2011. Tverrfjellhytta / Snøhetta. [on-line] Available at: <http://www.archdaily.com/180932/tverrfjellhytta-snohetta/> [Accessed: Sep 4, 2017].

ArchDaily, 2012. Yusuhara Wooden Bridge Museum / Kengo Kuma & Associates. [on-line] Available at: <http://www.archdaily.com/199906/yusuhara-wooden-bridge-museum-kengo-kuma-associates/> [Accessed: Dec 20, 2017].

Archdaily, 2017b. Workshop AWEL Andelfingen / Rossetti+Wyss architects. [on-line] Available at: <http://www.archdaily.com/870011/workshop-awel-andelfingen-rossetti-plus-wyss-architects> [Accessed: Sep 4, 2017].

ArchDaily, 2017a. Architecture Projects. [on-line] Available at: <https://www.archdaily.com/search/projects> [Accessed: Dec 20, 2017].

Bedon, C. and Fragiacomo, M., 2015. Numerical and analytical assessment of the buckling behaviour of Blockhaus log-walls under in-plane compression. *Engineering Structures,* [e-journal] 82, pp.134-150.

Bedon, C., Rinaldin, G., Izzi, M., Fragiacomo, M. and Amadio, C., 2015. Assessment of the structural stability of Blockhaus timber log-walls under in-plane compression via full-scale buckling experiments. *Construction and Building Materials,* [e-journal] 78, pp.474-490.

Bejder, A.K., 2012. Aesthetic Qualities of Cross Laminated Timber. Ph.D. Aalborg University, Department of Civil Engineering. Available at: <http://vbn.aau.dk/files/71275631/Aesthetic_Qualities_of_Cross_Laminated_Timber.pdf>

Building Information Ltd., 2014. RT 82-11168 Hirsitalon suunnitteluperusteet [e-version]. Building Information LTd.

Competitionline, 2016. Werkhalle AWEL. [on-line] Available at: <https://www.competitionline.com/de/projekte/58876> [Accessed: Sep 4, 2017].

Divisare, 2016. Kengo Kuma & Associates, Yusuhara Wooden Bridge Museum. [on-line] Available at: <https://divisare.com/projects/310486-kengo-kuma-associates-takumi-ota-yusuhara-wooden-bridge-museum> [Accessed: Mar 29, 2017].

Falk, A., 2005. Architectural aspects of massive timber : structural form and systems. [e-version] Luleå University of Technology. Available at: <http://www.diva-portal.org/smash/get/diva2:999695/FULLTEXT01.pdf>.

Groat, L.N. and Wang, D., 2013. *Architectural research methods.* [e-book] 2. ed. Hoboken, N.J.: Wiley. Available through: <https://oula.finna.fi/Record/oula.1200417>.

Grossi, P., Sartori, T., Giongo, I. and Tomasi, R., 2016. Analysis of timber log-house construction system via experimental testing and analytical modelling. *Construction and Building Materials,* [e-journal] 102, Part 2, pp.1127-1144.

Harju, J., 2017. Puurakentaminen kasvaa - Puuinfon Viljakainen arvioi seitsemän puukohdetta. *Rakennuslehti,* 12 June. [on-line] Available at: <https://www.rakennuslehti.fi/2017/06/puurakentaminen-kasvaa-puuinfon-viljakainen-arvioi-seitseman-puukohdetta/> [Accessed: Sep 6, 2017].

Heikkilä, J. ed., 2002. *Massive wood architecture. Publication B21.* Oulu University Press, Oulu 2002: University of Oulu, Department of Architecture.

Jokelainen, J., 2005. Hirsirakenteiden merkitys asema-arkkitehtuurille 1860-1950. Ph.D. Oulun yliopisto, Teknillinen tiedekunta, arkkitehtuurin osasto. Available through University of Oulu website.

Kaila, P., 1996. From log to chipboard - The development of the Finnish wooden house. In: Norri, M. and Paatero, K., eds. 1996. *Timber construction in Finland.* Helsinki: Suomen rakennustaiteen museo. Puuinformaatio Ry. pp.158-161.

Kuittinen, M., 2016. Carbon footprinting in humanitarian construction: what are the CO2 emissions and how to mitigate them? .

Kuusamo Hirsitalot, 2017. *Hirsivalikoima.* [on-line] Available at: <https://www.kuusamohirsitalot.fi/hirsirakentaminen/hirsivalikoima.html> [Accessed: Aug 4, 2017].

Luusua, A., Lakkala, M., Pihlajaniemi, J., 2019. Perceptions of Log and Log Buildings among Finnish Architectural and Building Industry Professionals. *Architectural Research in Finland,* 3 (1), pp. 133-147

Mammuttikoti, 2015. Ulkoseinien vaihtoehdot. [on-line] Available at: <http://www.mammuttikoti.fi/se/bygga-hus/vaggalternativ/> [Accessed: Aug 4, 2017].

Meier, E., 2016. Wood and Moisture - The Wood Database. [on-line] Available at: <http://www.wood-database.com/wood-articles/wood-and-moisture/> [Accessed: Aug 8, 2017].

Mölsä, S., 2016. Näin Suomi homehtui – hyvä rakentamistapa sai aikaan pahaa jälkeä. *Rakennuslehti,* 5 June. [on-line] Available at: <https://www.rakennuslehti.fi/201 6/06/nain-suomi-homehtui-hyva-rakentamistapa-sai-aikaan-pahaa-jalkea/> [Accessed: Sep 6, 2017].

O'Leary, Z., 2009. *The essential guide to doing your research project.* [e-book] Thousand Oaks, CA: Sage Publications. Available through: <https://oula.finna.fi/Record/oula.1098805>.

Peters, J.S., Damery, D.T. and Wilkie, R.W., 2017. Forests to buildings: A geography of log home manufacturing. *Journal of Sustainable Forestry,* [e-journal] 36 (1), pp.76-89.

Phleps, H., 1982. *The craft of log building : a handbook of craftsmanship in wood.* Ottawa: Lee Valley Tools.

Pihlajaniemi, J., 2014. Arkkitehtoninen laatu ja asuntojen hinnat: empiirinen tutkimus Helsingin kantakaupungin alueelta. Oulun yliopisto, Arkkitehtuurin tiedekunta. Available through University of Oulu website.

Ruuska, A. and Häkkinen, T., 2012. Impact of wood building on GHG emissions. [e-version] VTT. Available through: <http://www.puuinfo.fi/sites/default/files/content/ tiedotteet/vtt-selvitti-puurakentamisen-yleistyminen-vahentaa-co2-paastoja-huomattavasti/potentialimpactofwoodbuildingonghgemissions1252012.pdf>.

Schweizer Baudokumentation, 2015. Werkhalle AWEL, Andelfingen. [on-line] Available at: <http://projekte.baudokumentation.ch/de/werkhalle-awel-andelfingen> [Accessed: Sep 4, 2017].

Soikkeli, A. and Koiso-Kanttila, J., 2006. Kärsämäki Church in Finland - Modern Language of Form Combined with Old Techniques and Craftsmanship. In: Lourenço, P. B., Roca, P., Modena, C., eds. 2006. *Structural Analysis of Historical Constructions, Proceedings of the 5th International Conference [on] Structural Analysis of Historical Constructions: Possibilities of Numerical and Experimental Techniques.* New Delhi, India, 6-8 nov, 2006. Macmillan.

Thibaut, B., Gril, J. and Fournier, M., 2001. Mechanics of wood and trees: some new highlights for an old story : Comptes Rendus de l'Académie des Sciences - Series IIB - Mechanics. [e-version]. 329 (9) pp.701-716.

Thony, P., Mabee, W., Kozak, R. and Bull, G., 2006. A characterization of the British Columbia log home and timber frame manufacturing sector. *Forestry Chronicle,* [e-journal] 82 (1), pp.77-83.

Herzog, T., Natterer, J., Schweitzer, R., Volz, M., and Winter, W., 2012. *Timber construction manual*. Basel: Birkhäuser.

Vuolle-Apiala, R., 2012. *Hirsitalo ennen ja nyt.* Vantaa: Moreeni.

Zumthor, P., 2006. *Zumthor: Spirit of Nature Wood Architecture Award 2006.* Tampere: Rakennustieto Oy (Building Information Ltd.).